4X8 TALL RAISED GARDEN BED PLAN

FREE PREVIEW | Footprint 4 x 8 ft (32 sq ft)



Get the full 4x8 tall raised garden bed plan

13 pages: material list, cut list, every measurement and a drawing for each step, from the corner posts to the top cap. Instant PDF download.

$9.99 one time | 30-day money-back guarantee

Get the full plan

3dshedplans.com/4x8-tall-raised-garden-bed-plan/

Copyright 2026 3DSHEDPLANS.COM. 4x8 tall raised garden bed plan, free preview. Page 1

Look inside the full plan

Real pages from the 13-page 4x8 tall raised garden bed plan. The free preview shows the shape of the build; the full plan gives you the numbers to buy and cut once.

FULL PLAN

5 SHOPPING LIST

Buy straight boards with few knots; sight down each one. Cedar comes rough or smooth: pick one kind for the whole bed so the boards match in size.

Lumber

Item	Qty	Used for
Cedar 2x6 x 8 ft	9	Long side board, End board
Cedar 4x4 x 8 ft	1	Corner post
Cedar 2x4 x 10 ft	1	Cross tie, Mid stake
Cedar 2x6 x 10 ft	3	Optional cap: Cap, long side, Cap, end

Hardware and supplies

Item	Qty	Unit
Exterior screws 3 in, 304 stainless or coated for cedar (2 per board end into the posts)	48	each
Structural screws 6 in x 1/4 in, coated self-drilling, exterior (cross tie: 2 per end, from outside through board and stake)	4	each
Exterior screws 2 1/2 in, same kind (stakes: 2 per course, [illegible]s: 2 each; cap: 2 into the post and 1 across each miter, every 16 in between)	42	each

Material list

Every board, sheet and fastener with quantities. Continues in the full plan.

5 SHOPPING LIST

FULL PLAN

Buy straight boards with few knots; sight down each one. Cedar comes rough or smooth: pick one kind for the whole bed so the boards match in size.

Lumber

Item	Qty	Used for
Cedar 2x6 x 8 ft	9	Long side board, End board
Cedar 4x4 x 8 ft	1	Corner post
Cedar 2x4 x 10 ft	1	Cross tie, Mid stake
Cedar 2x6 x 10 ft	3	Optional cap: Cap, long side, Cap, end

Hardware and supplies

Item	Qty	Unit
Exterior screws 3 in, 304 stainless or coated for cedar (2 per board end into the posts)	48	each
Structural screws 6 in x 1/4 in, coated self-drilling, exterior (cross tie: 2 per end, from outside through board and stake)	4	each
Exterior screws 2 1/2 in, same kind (stakes: 2 per course, [illegible]s: 2 each; cap: 2 into the post and 1 across each miter, every 16 in between)	42	each

Every measurement

Front, side and back views with dimensions, then one drawing per step.

Get the full plan $9.99

3dshedplans.com/4x8-tall-raised-garden-bed-plan/

Copyright 2026 3DSHEDPLANS.COM. 4x8 tall raised garden bed plan, free preview. Page 2

Before you start

Rules for garden structures vary by town and HOA. Check your local permit office before you build, and call 811 before you dig.

Safety: wear eye and ear protection and gloves, keep blades sharp and guards on, and lift boards with a helper.

This free version walks through the five stages of the 4x8 tall raised garden bed plan. Below: the finished bed, filled and ready to plant.

At a glance: 4 x 8 ft outside, 16 1/2 in deep (18 in with the cap), 3 courses of 2x6 cedar on 4x4 cedar corner posts, 2x4 stakes and a cross tie. Tall here means a third course over the common 11 in bed: you bend far less, and the cap is a ledge to rest on. Skill: beginner, if you can measure, cut square and drive screws. Time: about 9 hours for one person, best over a weekend. Cost: the cedar is most of it (9 cedar 2x6 x 8 ft, 1 cedar 4x4 x 8 ft, 1 2x4 x 10 ft; 3 cedar 2x6 x 10 ft for the cap), then about 1.67 cu yd of soil, then the screws. Tools: circular or miter saw, drill and driver, tape, square, 4 ft level, hand sledge and clamps. Wear a dust mask when you cut cedar.

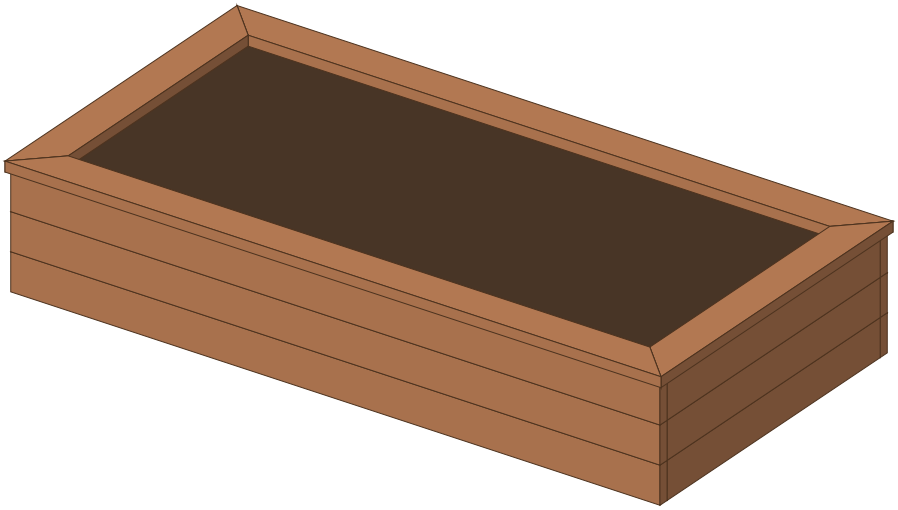

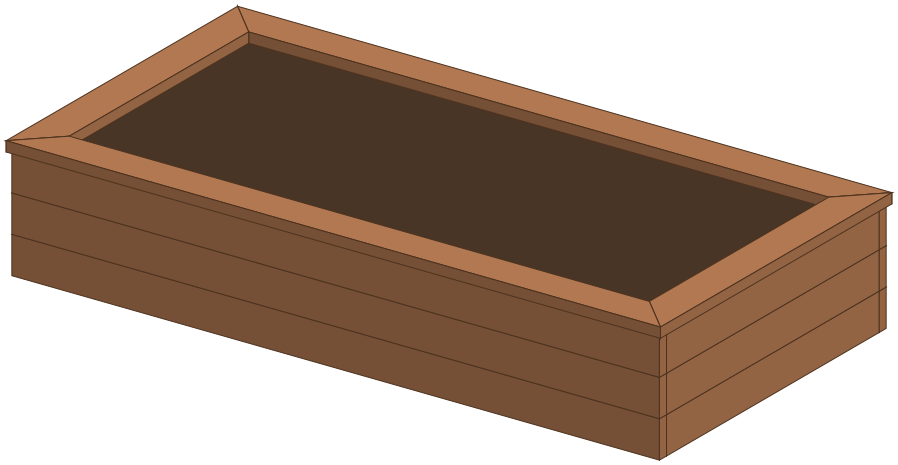

Full 4x8 tall raised garden bed plan: material list, cut list, every measurement | $9.99 | 3dshedplans.com/4x8-tall-raised-garden-bed-plan/

1 SITE AND END PANELS

Pick a sunny, level spot, level the ground and smother the grass. Screw the end boards to two corner posts for each end, flush at the top and the sides.

In the full plan: the board lengths, the screw pattern and the square check for each panel.
www.3dshedplans.com/4x8-tall-raised-garden-bed-plan/

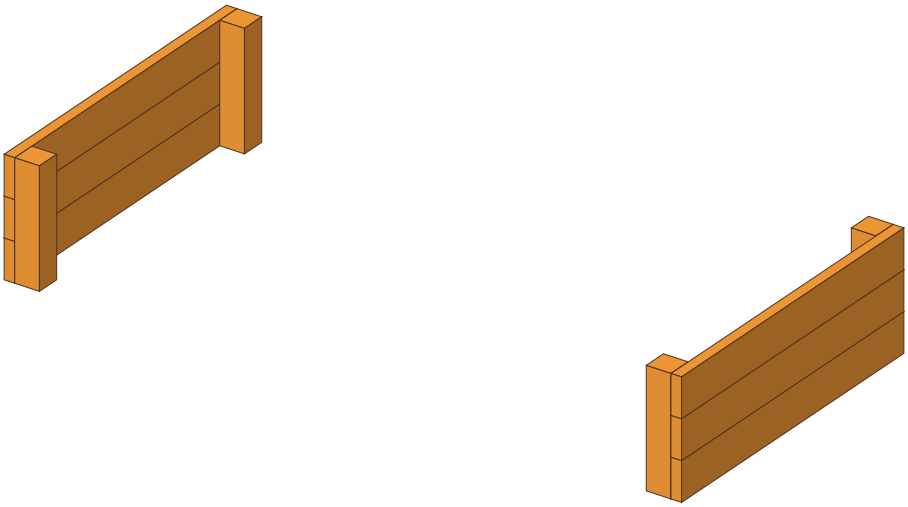

2 LONG SIDES

Stand the two end panels up and screw the long side boards to the posts. Square the box by measuring the diagonals.

In the full plan: the diagonal to check and the order of the screws.
www.3dshedplans.com/4x8-tall-raised-garden-bed-plan/

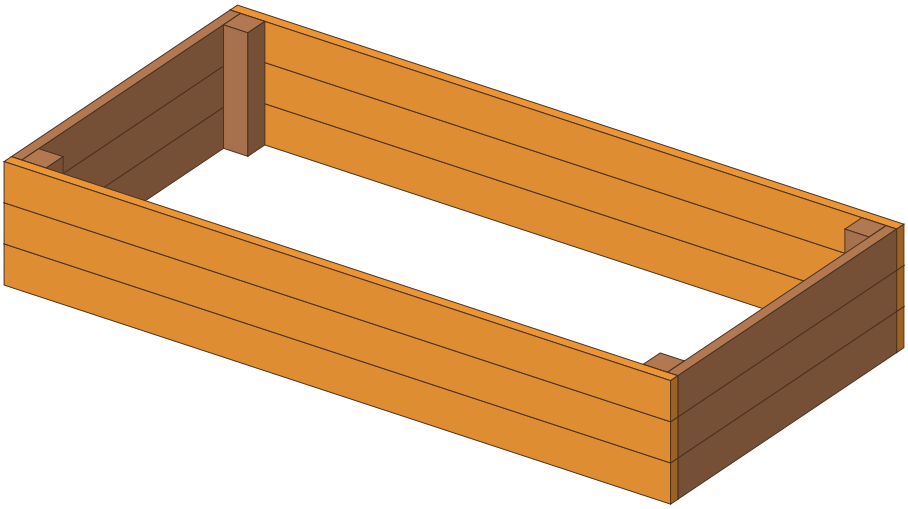

Copyright 2026 3DSHEDPLANS.COM. 4x8 tall raised garden bed plan, free preview. Page 4

3 SET IT IN PLACE AND DRIVE THE MID STAKES

Set the box on the leveled spot. Drive a 2x4 stake inside each long side at mid length and screw all the boards to it. Then set one 2x4 cross tie between the two stakes to hold the tall sides together. Against gophers, moles or voles, line the bottom with hardware cloth now.

In the full plan: where each stake goes, how deep it is driven and how the cross tie is fixed. www.3dshedplans.com/4x8-tall-raised-garden-bed-plan/

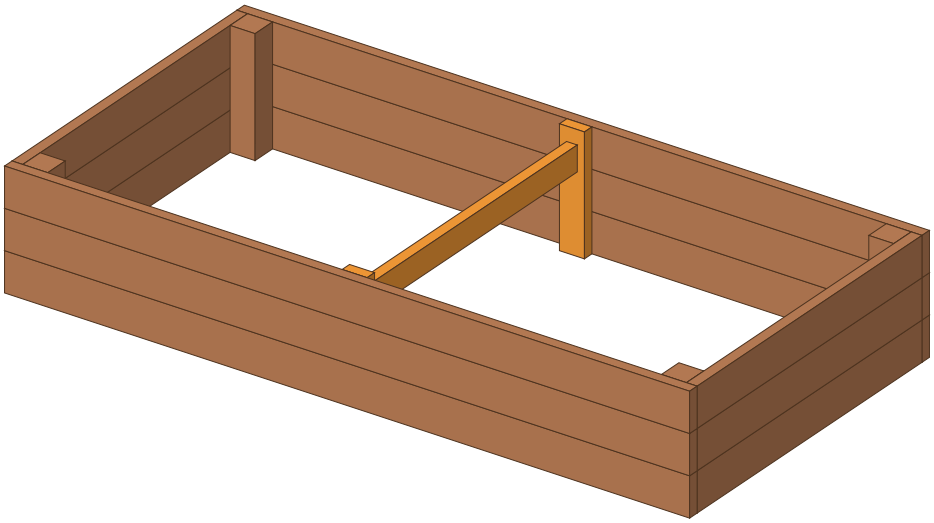

4 OPTIONAL CAP

Add a mitered cap on the top course: a ledge to rest on while you weed.

In the full plan: the cap cuts and the miter detail. www.3dshedplans.com/4x8-tall-raised-garden-bed-plan/

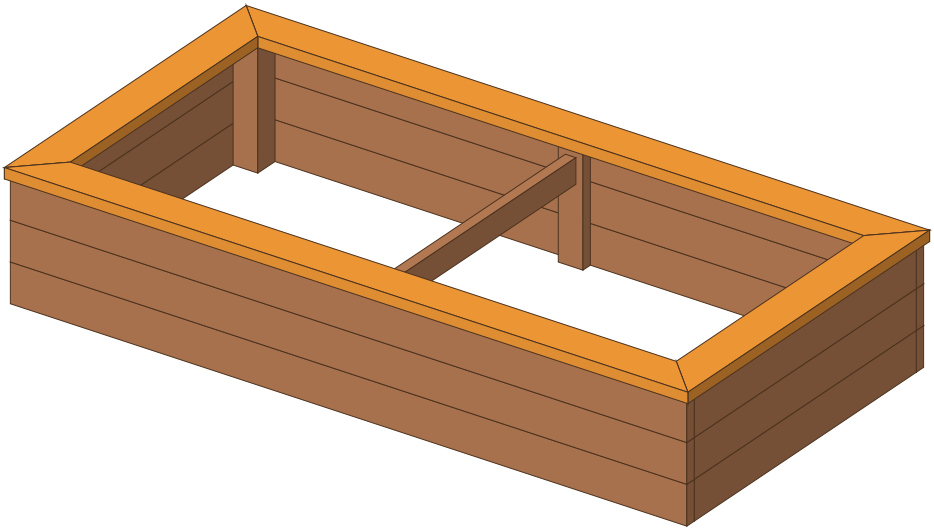

Full 4x8 tall raised garden bed plan: material list, cut list, every measurement | $9.99 | 3dshedplans.com/4x8-tall-raised-garden-bed-plan/

5 FILL AND PLANT

Fill in layers with raised bed mix, water each layer, and plant.

In the full plan: how much soil to order for this box and a common mix.
www.3dshedplans.com/4x8-tall-raised-garden-bed-plan/

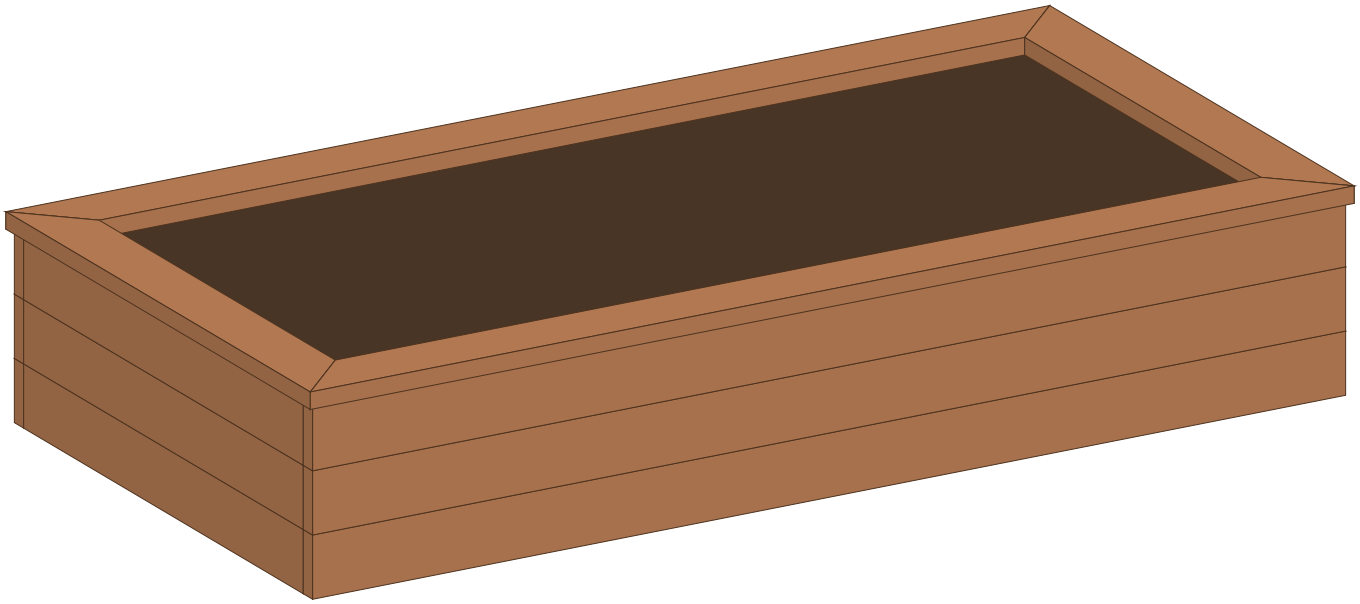

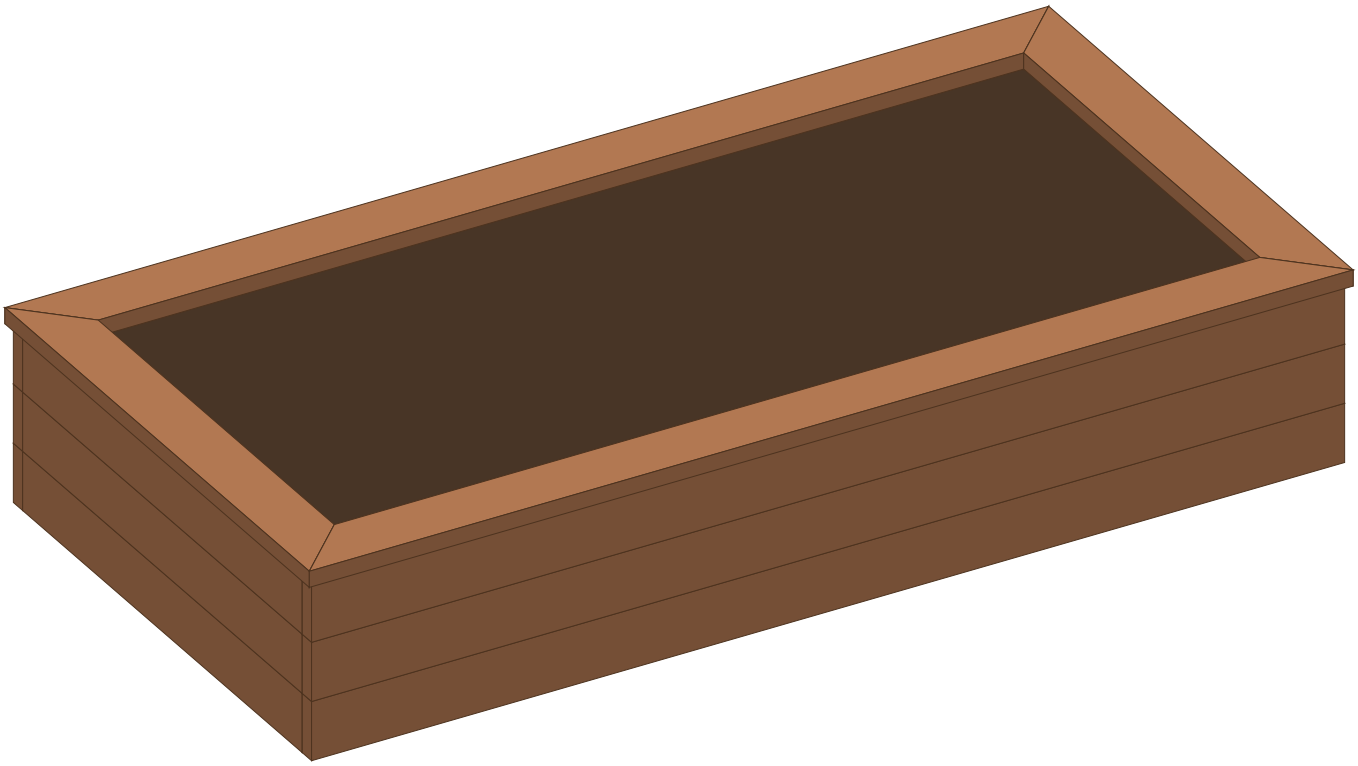

Full 4x8 tall raised garden bed plan: material list, cut list, every measurement | $9.99 | 3dshedplans.com/4x8-tall-raised-garden-bed-plan/

Ready to build your 4x8 tall raised garden bed?

	Free preview	Full plan
Overview and build stages	Yes	**Yes**
Material list with quantities	No	**Yes**
Cut list for every part	No	**Yes**
Measurements in every step	Overall sizes	**Every part**
Step-by-step drawings	Preview pages	**13 pages**
Pro tips	No	**Yes**
Price	Free	**$9.99**

Save a weekend of guesswork

13 pages: material list, cut list, every measurement and a drawing for each step, from the corner posts to the top cap. Instant PDF download.

$9.99 **one time | 30-day money-back guarantee**

Get the full plan

3dshedplans.com/4x8-tall-raised-garden-bed-plan/

Not useful? Email support@3dshedplans.com within 30 days for a full refund.

Looking for another size? See every plan: 3dshedplans.com/shop/

Copyright 2026 3DSHEDPLANS.COM. 4x8 tall raised garden bed plan, free preview. Page 7