4X6 ELEVATED CHICKEN COOP PLAN

FREE PREVIEW | Footprint 4 x 6 ft (24 sq ft)

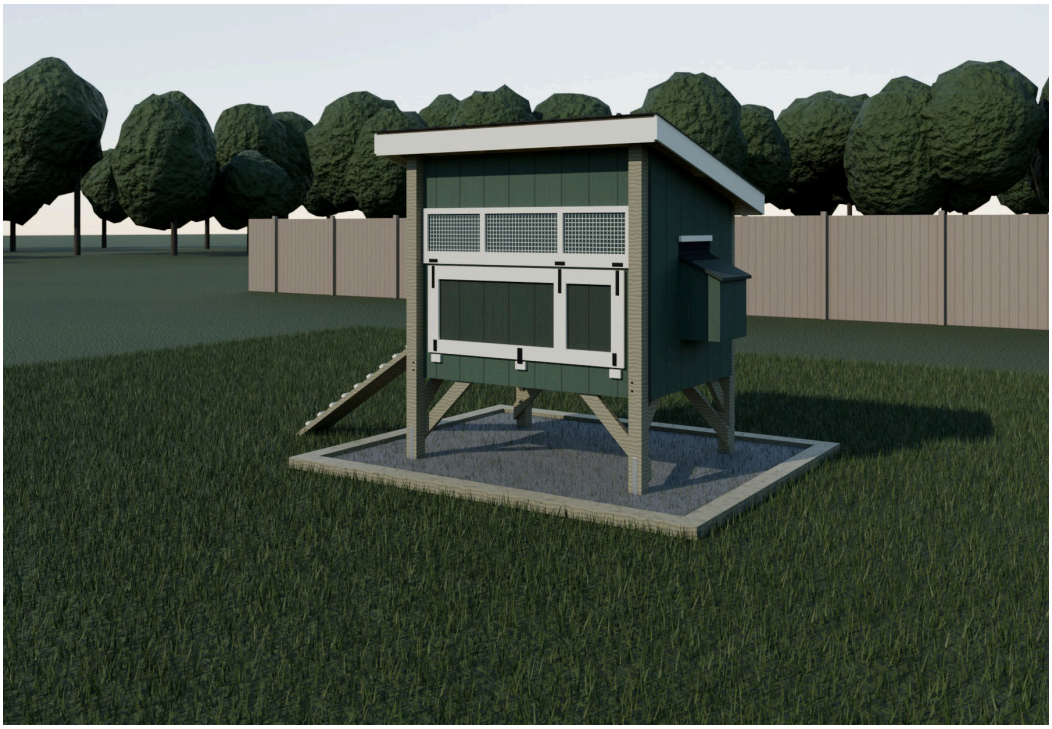

Get the full 4x6 elevated chicken coop plan

41 pages: material list, cut list, every measurement and a drawing for each step, from the legs to the metal roof. Instant PDF download.

$19.99 one time | 30-day money-back guarantee

Get the full plan

3dshedplans.com/4x6-elevated-chicken-coop-plan/

Copyright 2026 3DSHEDPLANS.COM. 4x6 elevated chicken coop plan, free preview. Page 1

Look inside the full plan

Real pages from the 41-page 4x6 elevated chicken coop plan. The free preview shows the shape of the build; the full plan gives you the numbers to buy and cut once.

FULL PLAN

5 SHOPPING LIST BY SECTION

Each table lists what one part of the build needs, so you can buy in stages. Board counts follow the cutting plan after the cut list: parts of the same lumber share boards. The temporary braces and their stakes have their own rows in the base table. The last table lists the screws, nails, glue and paint.

Base: blocks, posts, rims and braces

Base: blocks, posts, rims and braces: item	Qty	Used for
PT ground-contact (UC4A) 2x4 x 8 ft	3	End knee brace (lapped), Knee brace (lapped)
PT ground-contact (UC4A) 2x6 x 8 ft	3	Back rim, End rim, Front rim
PT ground-contact (UC4A) 4x4 x 8 ft	4	Back post, Front post
Compacted gravel (bag 0.5 cu ft)	42	Base: blocks, posts, rims and braces
Solid concrete block (4 x 8 x 16 in)	4	Base: blocks, posts, rims and braces
Carriage bolt (1/2 x 6 in with nut and washer)	8	Base: blocks, posts, rims and braces
Temporary brace (2x4 x 8 ft, cut in half)	4	Base: blocks, posts, rims and braces
Brace stake (2x2 x 18 in wood stake)	8	Base: blocks, posts, rims and braces
Ground anchor (auger anchor 30 in with strap)	4	Base: blocks, posts, rims and braces
Tie plate (galvanized flat tie plate, 3 x 7 in)		ks, posts, rims and braces
Framing angle (sma		

Material list

Every board, sheet and fastener with quantities. Continues in the full plan.

FULL PLAN

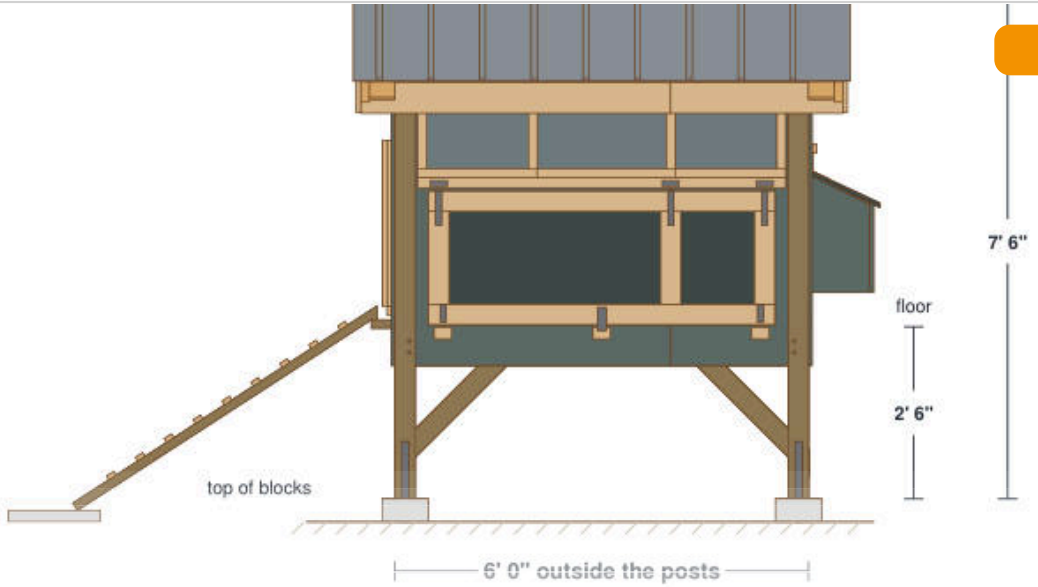

Every measurement

Front elevation: the cleanout door, the floor height and the overall height

Front, side and back views with dimensions, then one drawing per step.

Get the full plan $19.99

3dshedplans.com/4x6-elevated-chicken-coop-plan/

Copyright 2026 3DSHEDPLANS.COM. 4x6 elevated chicken coop plan, free preview. Page 2

Before you start

Check your local permit office before you build: rules for keeping hens, setbacks, and wind and snow loads differ from place to place.

Wear eye and ear protection, and gloves when you handle hardware cloth or metal roofing. The roof is worked from 6 ft and 4 ft step ladders.

This free version walks through the five stages of the build: a hen house on braced 4x4 legs for 4 hens, the floor 30 in above the blocks. Every board is 8 ft or shorter.

At a glance	
Skill	Beginner to intermediate: square and angle cuts, a drill driver and a level
Time	About two weekends for two people
Main tools	Circular saw, drill, impact driver, jigsaw, square, level, tin snips, step ladders
Hens and nests	4 hens, 1 nest you reach from outside, about 13 in of roost per hen
Fresh air	5.3 sq ft of screened vents, high on the front and at the back eave
Predator guard	1/2 in hardware cloth on every vent; two-move locks on every door and the nest lid
Main costs	Treated frame lumber, T1-11 siding, the metal roof, hardware cloth



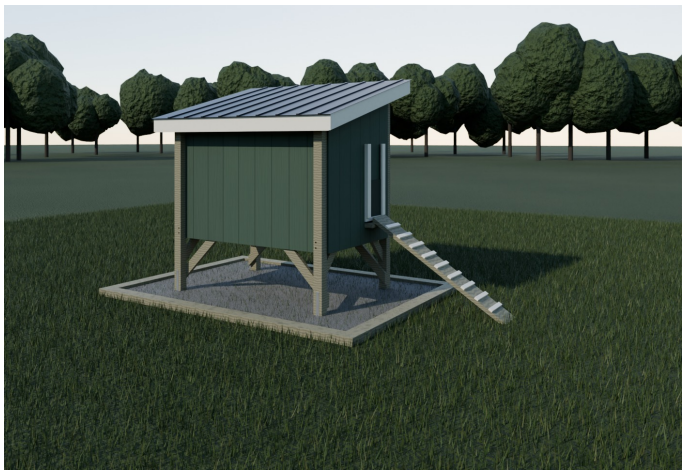

Full 4x6 elevated chicken coop plan: material list, cut list, every measurement | $19.99 | 3dshedplans.com/4x6-elevated-chicken-coop-plan/

1 POSTS AND FLOOR FRAME

Treated 4x4 posts stand on solid blocks on a gravel pad. The 2x6 rims are bolted to them and the joists hang between the rims.

In the full plan: the block layout, the post lengths, the bolt holes and the joist spacing. www.3dshedplans.com/4x6-elevated-chicken-coop-plan/

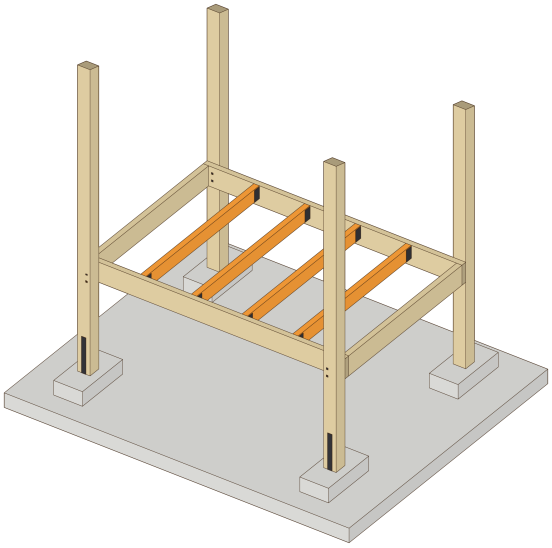

2 KNEE BRACES AND FLOOR

Lapped knee braces square the frame at every corner. One sheet of plywood makes the floor.

In the full plan: every brace cut and the floor sheet. www.3dshedplans.com/4x6-elevated-chicken-coop-plan/

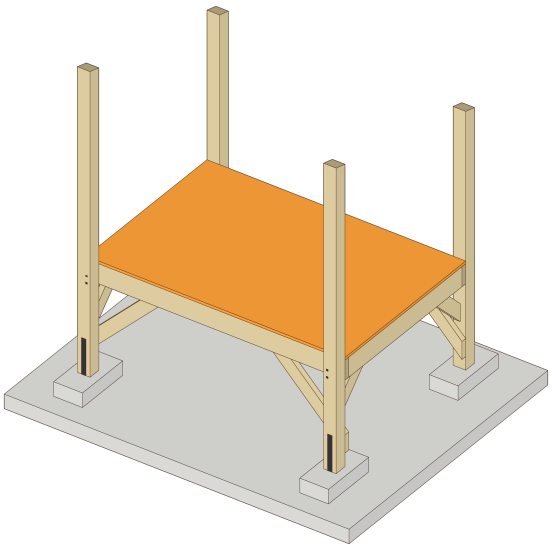

Copyright 2026 3DSHEDPLANS.COM. 4x6 elevated chicken coop plan, free preview. Page 4

3 WALLS

The walls are framed flat, lifted onto the floor and stood between the posts, with the cleanout opening across the front.

In the full plan: every stud, header and opening with its measurements. www.3dshedplans.com/4x6-elevated-chicken-coop-plan/

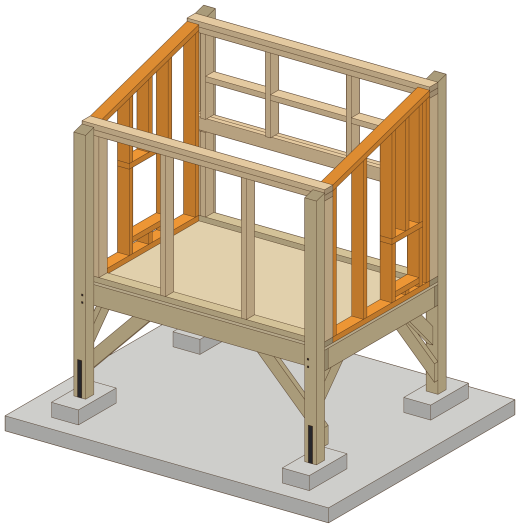

4 ROOF

2x4 rafters on a 3/12 slope, then a plywood deck and ribbed metal.

In the full plan: the pattern rafter with every mark, the lookouts and fly rafters at the overhangs and the roof deck cuts. www.3dshedplans.com/4x6-elevated-chicken-coop-plan/

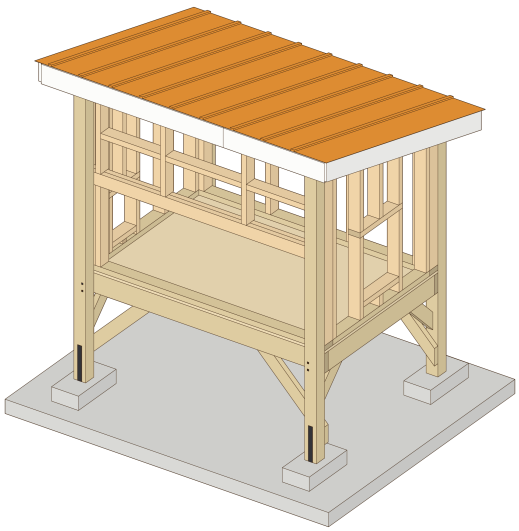

Copyright 2026 3DSHEDPLANS.COM. 4x6 elevated chicken coop plan, free preview. Page 5

5 SIDING, DOORS AND NEST BOX

T1-11 siding, a cleanout door along the front, a nest box you reach from outside and a pop door with its ramp.

In the full plan: the door, nest box, pop door and ramp details, and the roost and droppings board.
www.3dshedplans.com/4x6-elevated-chicken-coop-plan/

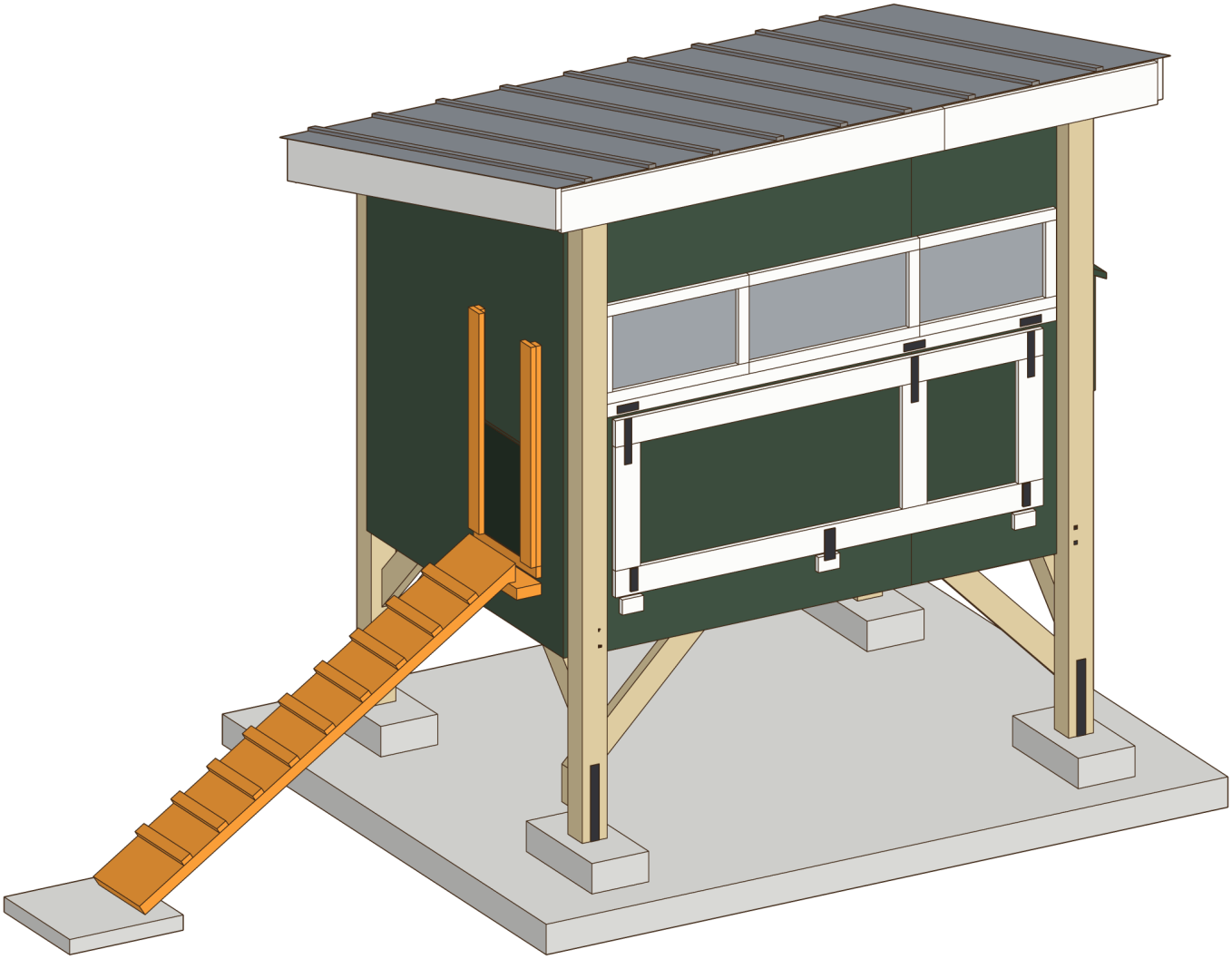

Full 4x6 elevated chicken coop plan: material list, cut list, every measurement | $19.99 | 3dshedplans.com/4x6-elevated-chicken-coop-plan/

Ready to build your 4x6 elevated chicken coop?

	Free preview	Full plan
Overview and build stages	Yes	**Yes**
Material list with quantities	No	**Yes**
Cut list for every part	No	**Yes**
Measurements in every step	Overall sizes	**Every part**
Step-by-step drawings	Preview pages	**41 pages**
Pro tips	No	**Yes**
Price	Free	**$19.99**

Save a weekend of guesswork

41 pages: material list, cut list, every measurement and a drawing for each step, from the legs to the metal roof. Instant PDF download.

$19.99 **one time | 30-day money-back guarantee**

Get the full plan

3dshedplans.com/4x6-elevated-chicken-coop-plan/

Not useful? Email support@3dshedplans.com within 30 days for a full refund.

Looking for another size? See every plan: 3dshedplans.com/shop/

Copyright 2026 3DSHEDPLANS.COM. 4x6 elevated chicken coop plan, free preview. Page 7