12X20 PERGOLA PLAN

FREE PREVIEW | Footprint 12 x 20 ft (240 sq ft)



Get the full 12x20 pergola plan

40 pages: material list, cut list, every measurement and a drawing for each step, from the post footings to the rafters. Instant PDF download.

$14.99 one time | 30-day money-back guarantee

Get the full plan

3dshedplans.com/12x20-pergola-plan/

Copyright 2026 3DSHEDPLANS.COM. 12x20 pergola plan, free preview. Page 1

Look inside the full plan

Real pages from the 40-page 12x20 pergola plan. The free preview shows the shape of the build; the full plan gives you the numbers to buy and cut once.

FULL PLAN

Temporary bracing

Temporary bracing: item	Qty	Used for
2x4 x 8 ft	18	Batter board crosspiece, Temporary post brace, along the beam, Temporary post brace, toward the other beam
Deck screws (3 in, rated for treated lumber, 1 lb box)	2	Temporary bracing
Mason's line, plumb bob, marking paint (1 each)	1	Temporary bracing
Wood stake (2x2, 24 in)	42	3 per batter board corner, and 2 per temporary brace so soft ground is covered

Beams

Beams: item	Qty	Used for
Pressure-treated 2x10 x 22 ft	4	Beam board
Carriage bolt, washer and nut (1/2 x 7 in, hot-dip galvanized)	12	Beams
Nails (2 1/2 in (8d) ring shank, hot-dip galvanized, 1 lb box)	3	Beams and doubled rafters
Structural screw (1/4 x 6 in, self-drilling, rated for treated lumber, box of 50)	6	Knee braces and purlins

Material list

Every board, sheet and fastener with quantities. Continues in the full plan.

FULL PLAN

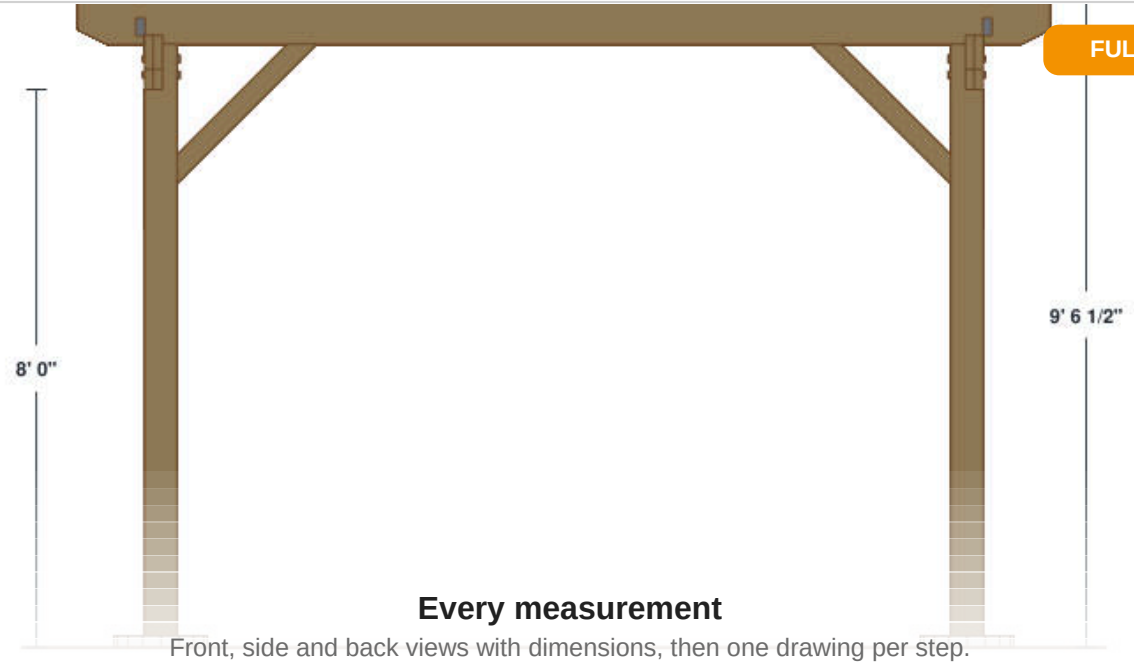

Every measurement

Front, side and back views with dimensions, then one drawing per step.

Get the full plan $14.99

3dshedplans.com/12x20-pergola-plan/

Copyright 2026 3DSHEDPLANS.COM. 12x20 pergola plan, free preview. Page 2

Before you start

Pergola rules (height, setbacks, permits, footing depth) vary by town and HOA. Check your local permit office before you build, and have buried lines marked before you dig.

Safety: wear eye and ear protection, keep blades sharp and guards on, work from a rolling scaffold with a guard rail and stable step ladders, with helpers, and stay off the rafters.

This plan is for a sheltered backyard. It is not for mounting on a slab or on post bases: the posts are set in concrete.

This free version walks through five stages of the 12x20 pergola plan with views from the full plan. Below: the finished pergola. The gravel floor in the pictures is optional and not part of the plan.

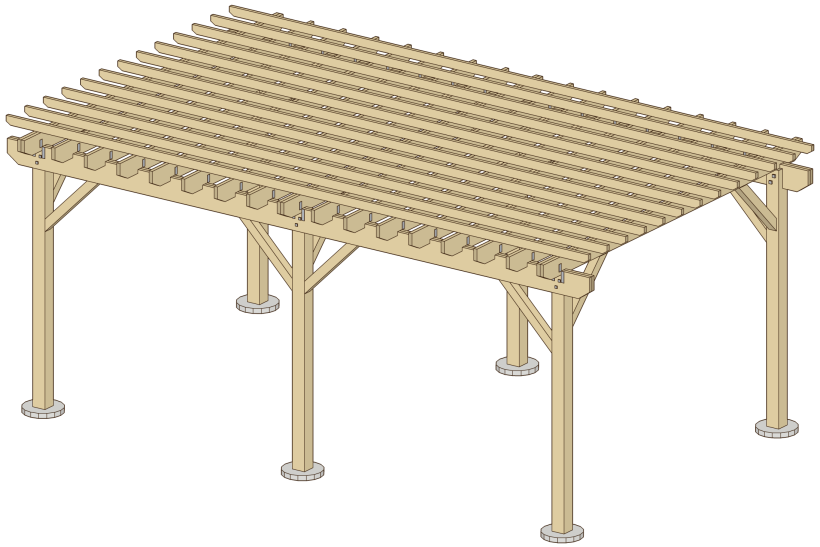

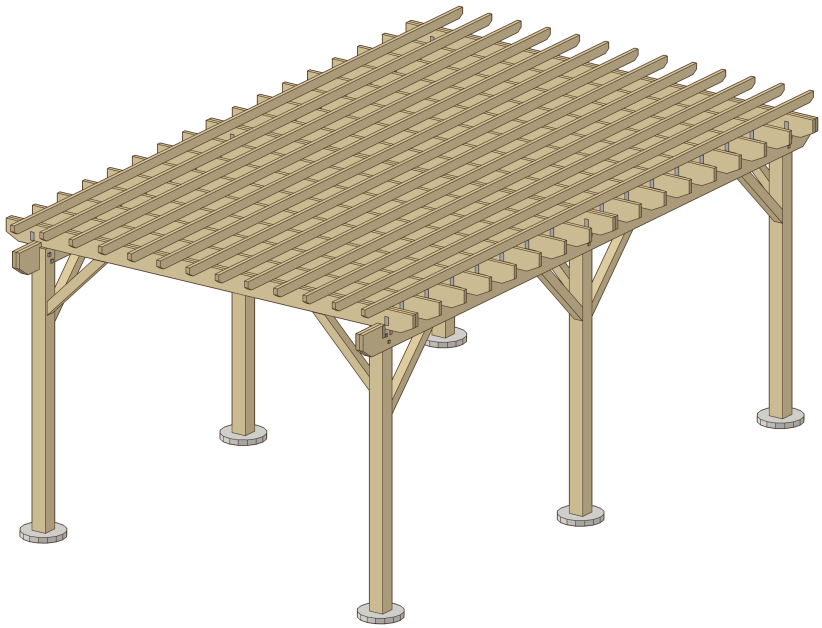

Full 12x20 pergola plan: material list, cut list, every measurement | $14.99 | 3dshedplans.com/12x20-pergola-plan/

1 LAYOUT AND POSTS IN CONCRETE

String out the post centers, prove the layout square with equal diagonals, dig the holes (to your frost line if it is deeper) and set the six posts in concrete, plumb and braced.

In the full plan: the foundation plan, the footing drawing and the concrete count. www.3dshedplans.com/12x20-pergola-plan/

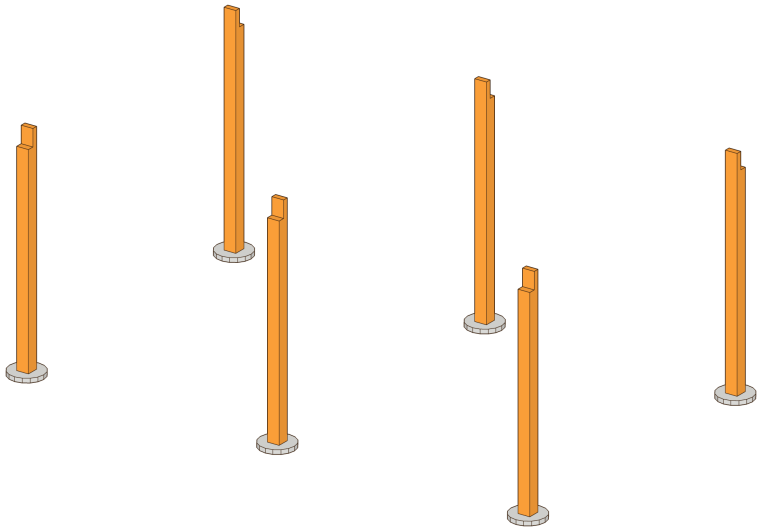

2 BEAMS

The doubled beams go up one board at a time, sit on the notch shoulders and are bolted through the post. Eight knee braces go on under them.

In the full plan: the notch drawing, bolt positions and the end pattern. www.3dshedplans.com/12x20-pergola-plan/

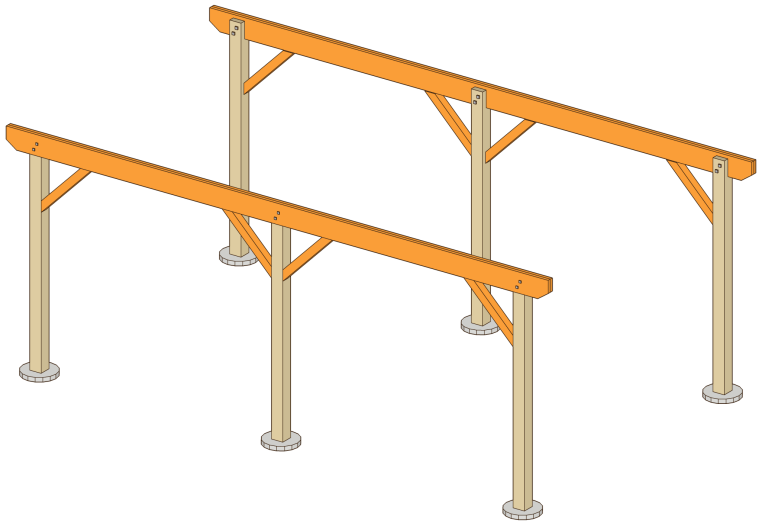

Copyright 2026 3DSHEDPLANS.COM. 12x20 pergola plan, free preview. Page 4

3 POST-LINE RAFTERS

Doubled rafters go over each post line, notched over both beams.

In the full plan: the rafter pattern and how each board goes up without carrying it up a ladder: two lift from the ground, a third catches it on the scaffold. www.3dshedplans.com/12x20-pergola-plan/

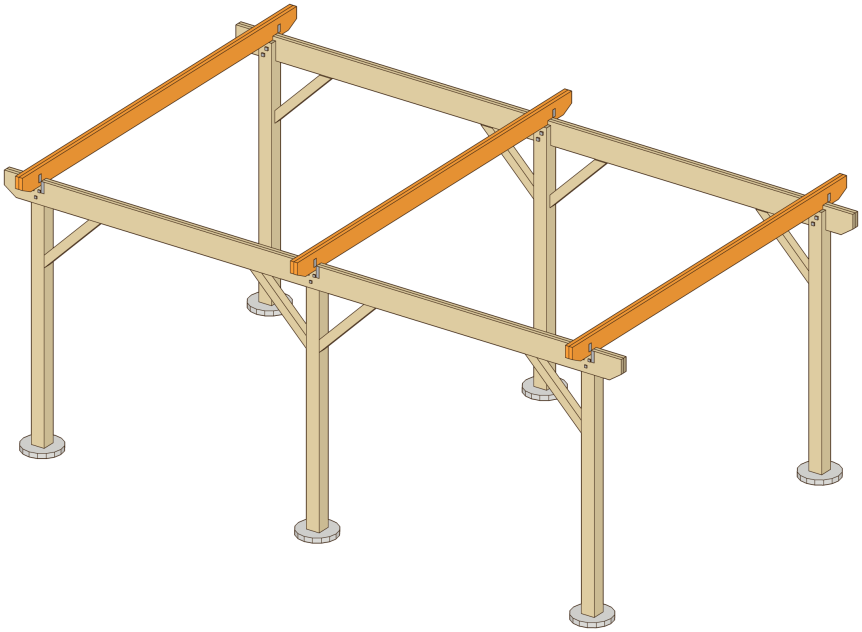

4 KNEE BRACES

Angled braces go on under the doubled rafters, so every post is braced in both directions.

In the full plan: the brace cut drawing and how each end is seated. www.3dshedplans.com/12x20-pergola-plan/

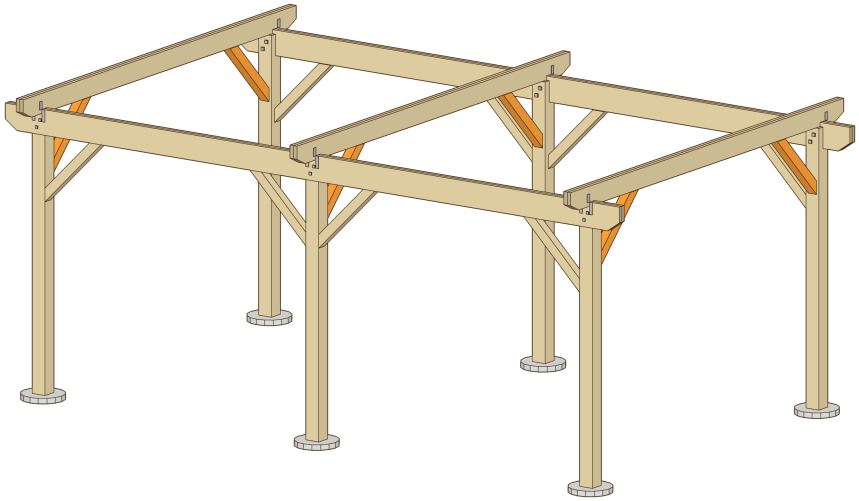

Copyright 2026 3DSHEDPLANS.COM. 12x20 pergola plan, free preview. Page 5

5 RAFTERS AND PURLINS

Notched rafters drop over both beams with a tie at every crossing, then purlins stand on edge across them.

In the full plan: the rafter pattern and every layout mark. www.3dshedplans.com/12x20-pergola-plan/

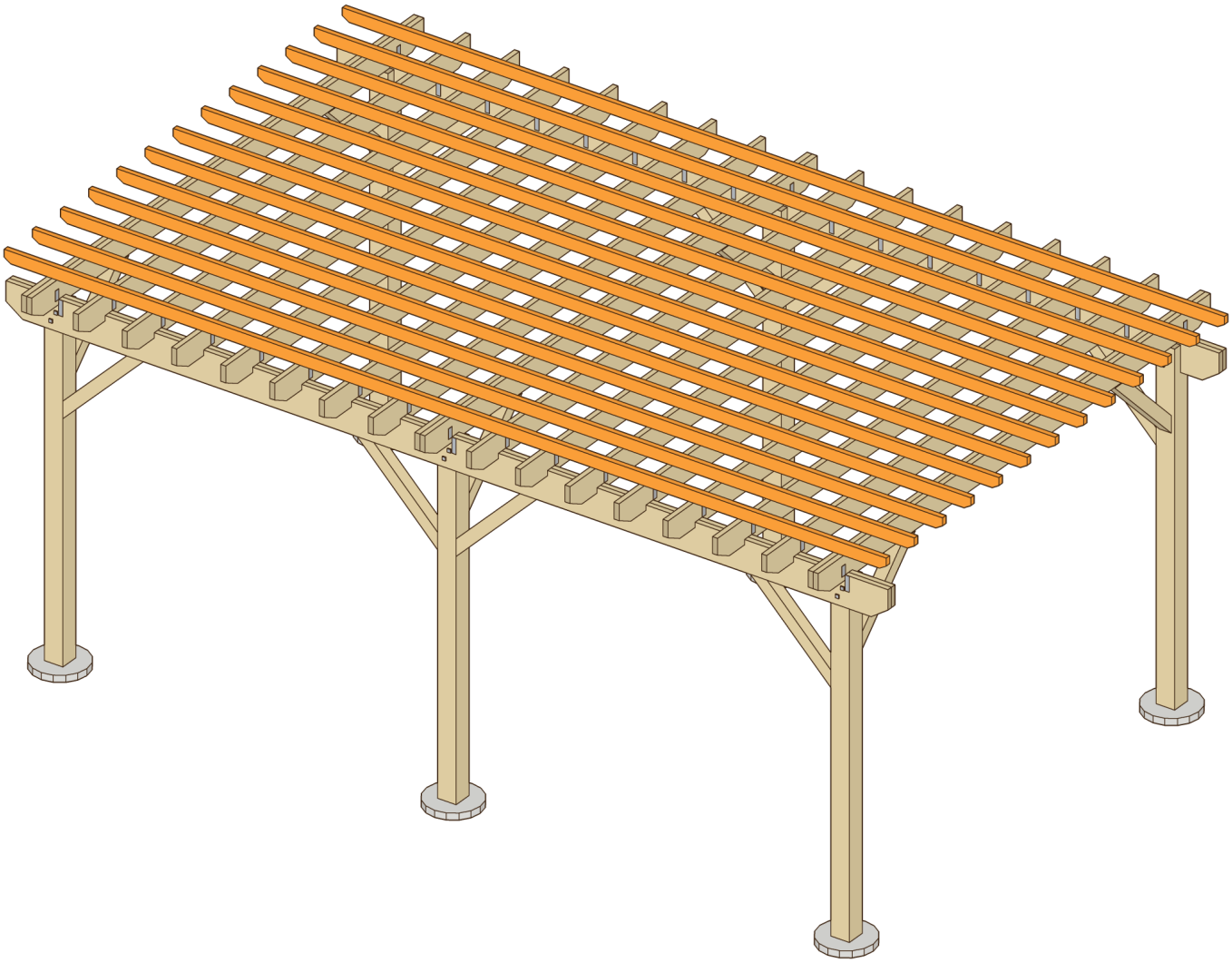

Copyright 2026 3DSHEDPLANS.COM. 12x20 pergola plan, free preview. Page 6

Ready to build your 12x20 pergola?

	Free preview	Full plan
Overview and build stages	Yes	**Yes**
Material list with quantities	No	**Yes**
Cut list for every part	No	**Yes**
Measurements in every step	Overall sizes	**Every part**
Step-by-step drawings	Preview pages	**40 pages**
Pro tips	No	**Yes**
Price	Free	**$14.99**

Save a weekend of guesswork

40 pages: material list, cut list, every measurement and a drawing for each step, from the post footings to the rafters. Instant PDF download.

$14.99 **one time | 30-day money-back guarantee**

Get the full plan

3dshedplans.com/12x20-pergola-plan/

Not useful? Email support@3dshedplans.com within 30 days for a full refund.

Looking for another size? See every plan: 3dshedplans.com/shop/

Copyright 2026 3DSHEDPLANS.COM. 12x20 pergola plan, free preview. Page 7